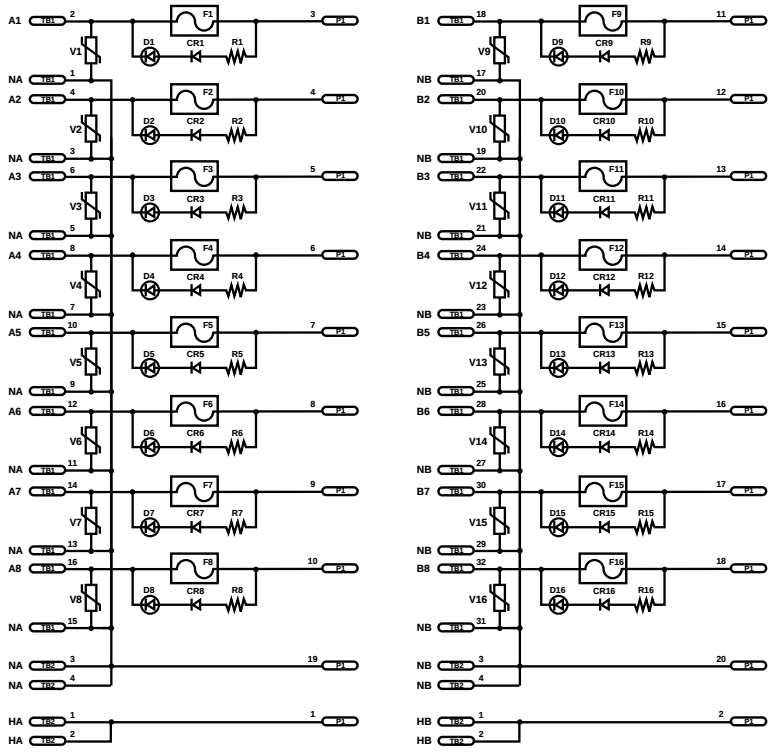

Passive - 2 wire
16 Channel
Output Fused w/LED
and MOV
GE FAnuc