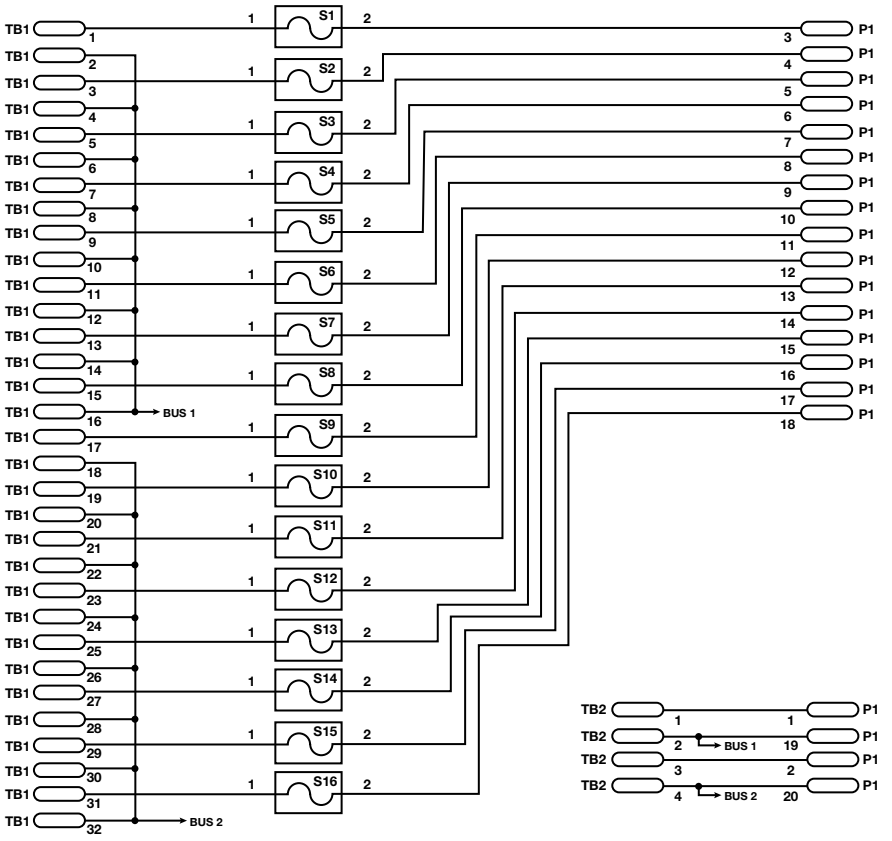

Passive- 2 wire
16 Channel
Output Fused with
Split Power Bus
Allen-Bradley, GE Fanuc