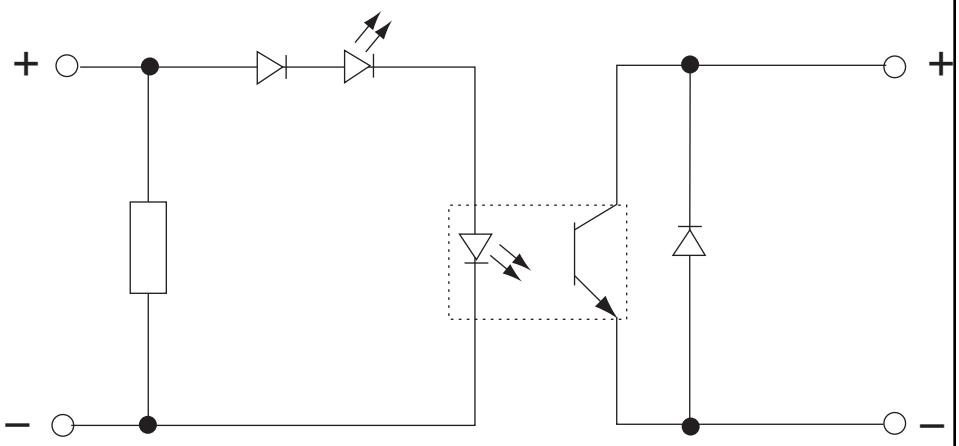

RSO 4
24 VDC / Open Fixed