Double Row Terminal Blocks

670A RZ Series

300 Volts

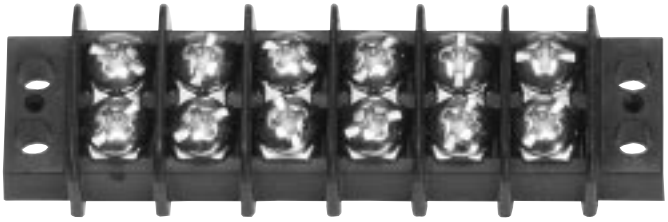

Specifications:

Base, Thermoplastic, 130° C
Closed Back Design
Screws, #6-32 Binder Head, Phil-Slot
Terminals, Plated Brass
2-30 Poles
The Suitability of These Devices
for Greater Currents or Voltage
Requirements Shall be
Determined in the End-Use Application

3/8" Centers
Wire Range with Wire Binding
Screw #12-#22 Awg - 20 Amps
Wire Range with Sems Pressure
Screw #14-#22 Awg Stranded or
Solid Wire (Cat. Designation 3865)
UL Recognized File No. E47811
CSA Certified File No. LR19766
CE

Catalog #	# of Poles	Dimensions A	Dimensions B	Catalog#	# of Poles	Dimensions A	Dimensions B
670A RZ 02	2	1.12	1.41	670A RZ 17	17	6.75	7.03
670A RZ 03	3	1.50	1.78	670A RZ 18	18	7.12	7.41
670A RZ 04	4	1.88	2.16	670A RZ 19	19	7.50	7.78
670A RZ 05	5	2.25	2.53	670A RZ 20	20	7.88	8.16
670A RZ 06	6	2.62	2.91	670A RZ 21	21	8.25	8.53
670A RZ 07	7	3.00	3.28	670A RZ 22	22	8.62	8.91
670A RZ 08	8	3.38	3.66	670A RZ 23	23	9.00	9.28
670A RZ 09	9	3.75	4.03	670A RZ 24	24	9.38	9.66
670A RZ 10	10	4.12	4.41	670A RZ 25	25	9.75	10.03
670A RZ 11	11	4.50	4.78	670A RZ 26	26	10.12	10.41
670A RZ 12	12	4.88	5.16	670A RZ 27	27	10.50	10.78
670A RZ 13	13	5.25	5.53	670A RZ 28	28	10.88	11.16
670A RZ 14	14	5.62	5.91	670A RZ 29	29	11.25	11.53
670A RZ 15	15	6.00	6.28	670A RZ 30	30	11.62	11.91
670A RZ 16	16	6.38	6.66				

Top Mounted Hardware is .187" Wide

Hardware Options:

KT 19	=	Full Quick Connect (0° flat)
KT 20	=	Full Quick Connect (45° Bend)
KT 21	=	Full Quick Connect (90° Bend)
ST	=	Full Solder
LL(J600)	=	Line to Line Jumper
3/4 ST	=	Half Solder
KT 25	=	Half Quick Connect (0° Flat)
KT 26	=	Half Quick Connect (45° Bend)
KT 27	=	Half Quick Connect (90° Bend)
SP(3865)	=	Sems Pressure Saddle Screw
Y(L)	=	Feed Thru Solder (.312)
LWW	=	Feed Thru Wire Wrap (.593)
YSY	=	Feed Thru Solder (.500)

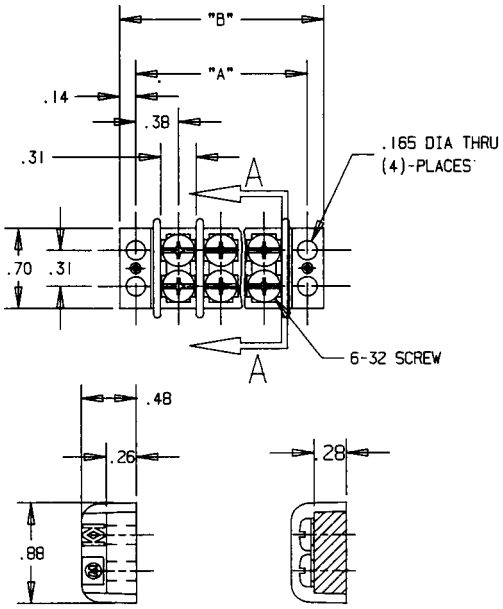

MARATHON® SPECIAL PRODUCTS