THE INFORMATION CONTAINED IN THIS DRAWING IS THE SOLE PROPERTY OF ANDERSON POWER PRODUCTS. ANY REPRODUCTION IN PART OR WHOLE WITHOUT THE WRITTEN PERMISSION OF ANDERSON POWER PRODUCTS IS PROHIBITED.

REV.	DESCRIPTION OF CHANGES	BY:	DATE

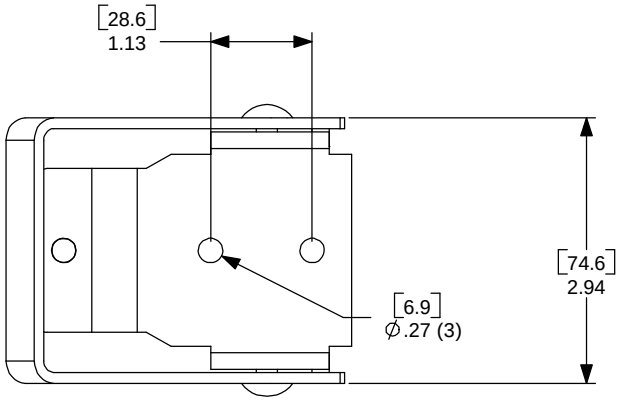

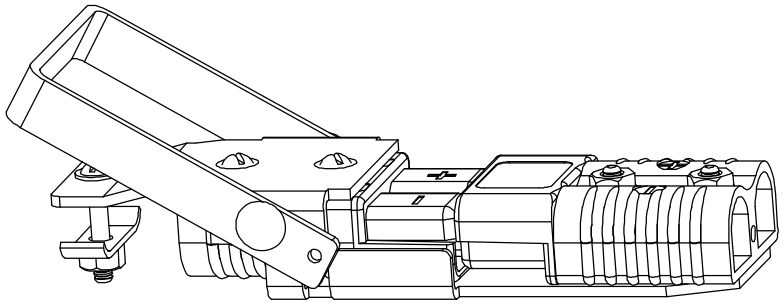

FULLY ASSEMBLED MANUAL RELEASE

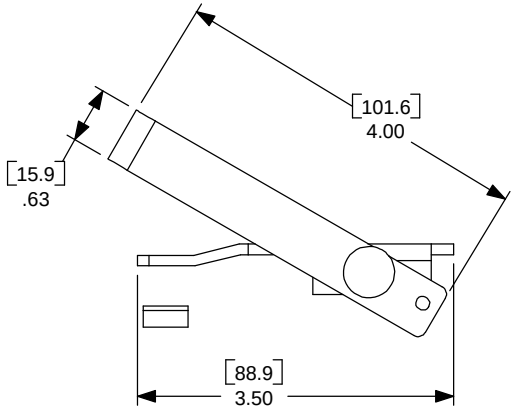

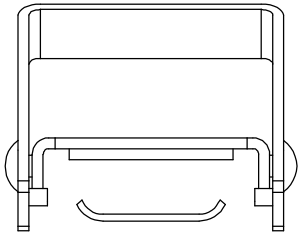

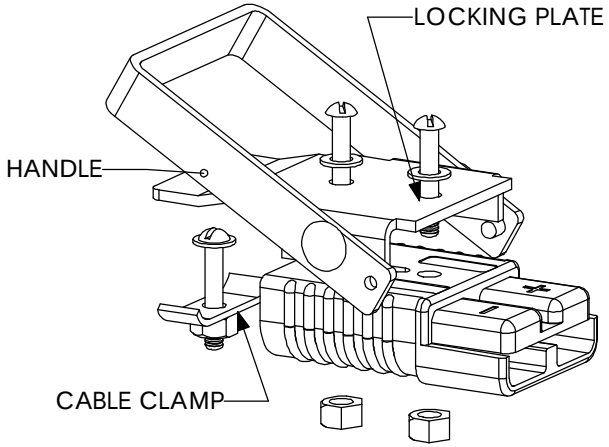

LOCKING HALF

NOTES:

1. MATERIAL: LOCKING PLATE, HANDLE, CLAMP- #11GA (.120") HOT ROLLED STEEL, PICKLED AND OILED. FINISH WITH ELECTROSTATIC POWDER COAT EPOXY- CRIMSON
2. LOCKING HALF HARDWARE: THREE SCREWS, THREE NUTS, THREE LOCKWASHERS
3. USE WITH CATALOG NUMBER 924 (MOUNTING HALF)

NEXT ASSY	USED ON
APPLICATION	

ITEM NO.	PART OR IDENTIFYING NO.	NOMENCLATURE OR DESCRIPTION	MATERIAL SPECIFICATION	QTY REQD

COPYRIGHT 1999 ANDERSON POWER PRODUCTS. ALL RIGHTS RESERVED. UNAUTHORIZED REPRODUCTION HEREBY PROHIBITIED.

DIMENSIONS ARE IN INCHES
DIMENSIONS IN PARENTHESES [ ] ARE IN MILLIMETERS

TOLERANCES ARE:
2PL- ±.02 [±.5]

MATERIALS: SEE NOTES

FINISH SEE NOTES

DO NOT SCALE DRAWING

CAD GENERATED DRAWING, DO NOT MANUALLY UPDATE

APPROVALS		DATE
DRAWN	CMS	1/31/00
CHECKED	DJF	1/31/00
RESP ENG	UFN	1/31/00
MFG ENG	CHB	2/1/00
QUAL ENG	RPO	2/1/00

ANDERSON POWER PRODUCTS

CATALOG NUMBER 923
SB175 MANUAL RELEASE
LOCKING HALF- BATTERY

SIZE	SPECIFICATION:	REV.
A	114217S1	0

SCALE		
NONE	CADFILES/01163	SHEET 1 OF 1