THE INFORMATION CONTAINED IN THIS DRAWING IS THE SOLE PROPERTY OF ANDERSON POWER PRODUCTS. ANY REPRODUCTION IN PART OR WHOLE WITHOUT THE WRITTEN PERMISSION OF ANDERSON POWER PRODUCTS IS PROHIBITED.

REV.	DESCRIPTION OF CHANGES	BY:	DATE
#	########	###	*****

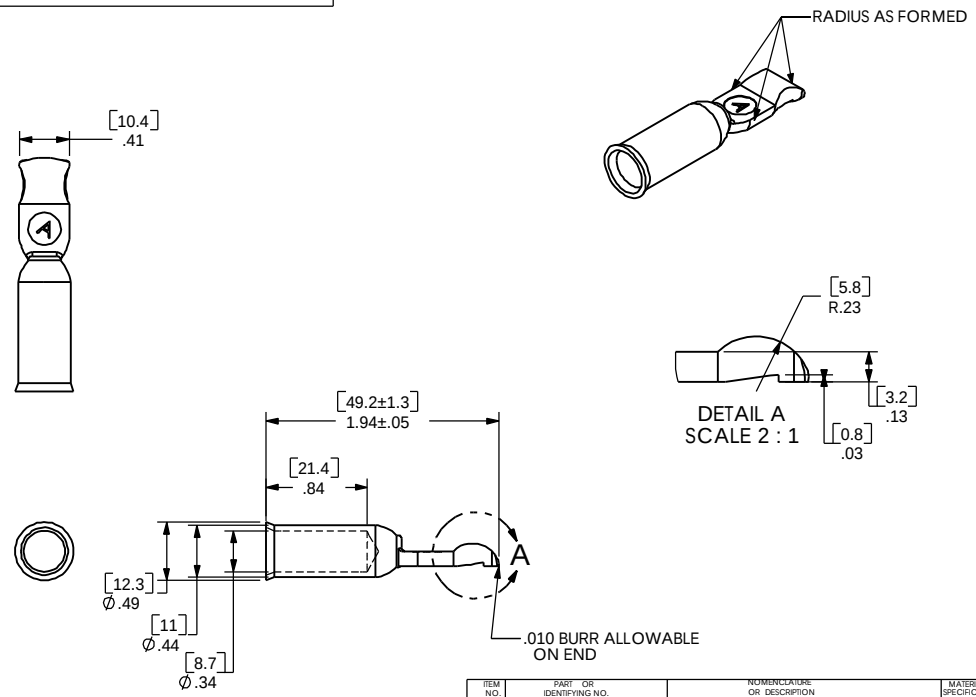

ITEM NO.	PART OR IDENTIFYING NO.	NOMENCLATURE OR DESCRIPTION	MATERIAL SPECIFICATION	QTY REQD

COPYRIGHT 1999 ANDERSON POWER PRODUCTS. ALL RIGHTS RESERVED. UNAUTHORIZED REPRODUCTION HEREBY PROHIBITIED.

DIMENSIONS ARE IN INCHES
DIMENSIONS IN PARENTHESES
[ ] ARE IN MILLIMETERS

TOLERANCES ARE:
2PL- ±.02 [±.5]

MATERIALS:
*****

FINISH
*****

DO NOT SCALE DRAWING

CAD GENERATED DRAWING,
DO NOT MANUALLY UPDATE

APPROVALS		DATE
DRAWN	BK	4/26/84
CHECKED	LVR	4/27/84
RESP ENG	HHR	4/30/84
MFG ENG	FER	4/30/84
QUAL ENG		

NEXT ASSY	USED ON
APPLICATION	

ANDERSON POWER PRODUCTS

CATALOG NUMBER 1319
PP120 CONTACT
#2 CABLE MAX.

SIZE	SPECIFICATION:	REV.
A	1C0608S29	3

SCALE		SHEET
NONE	CADFILES/01053	1 OF 1